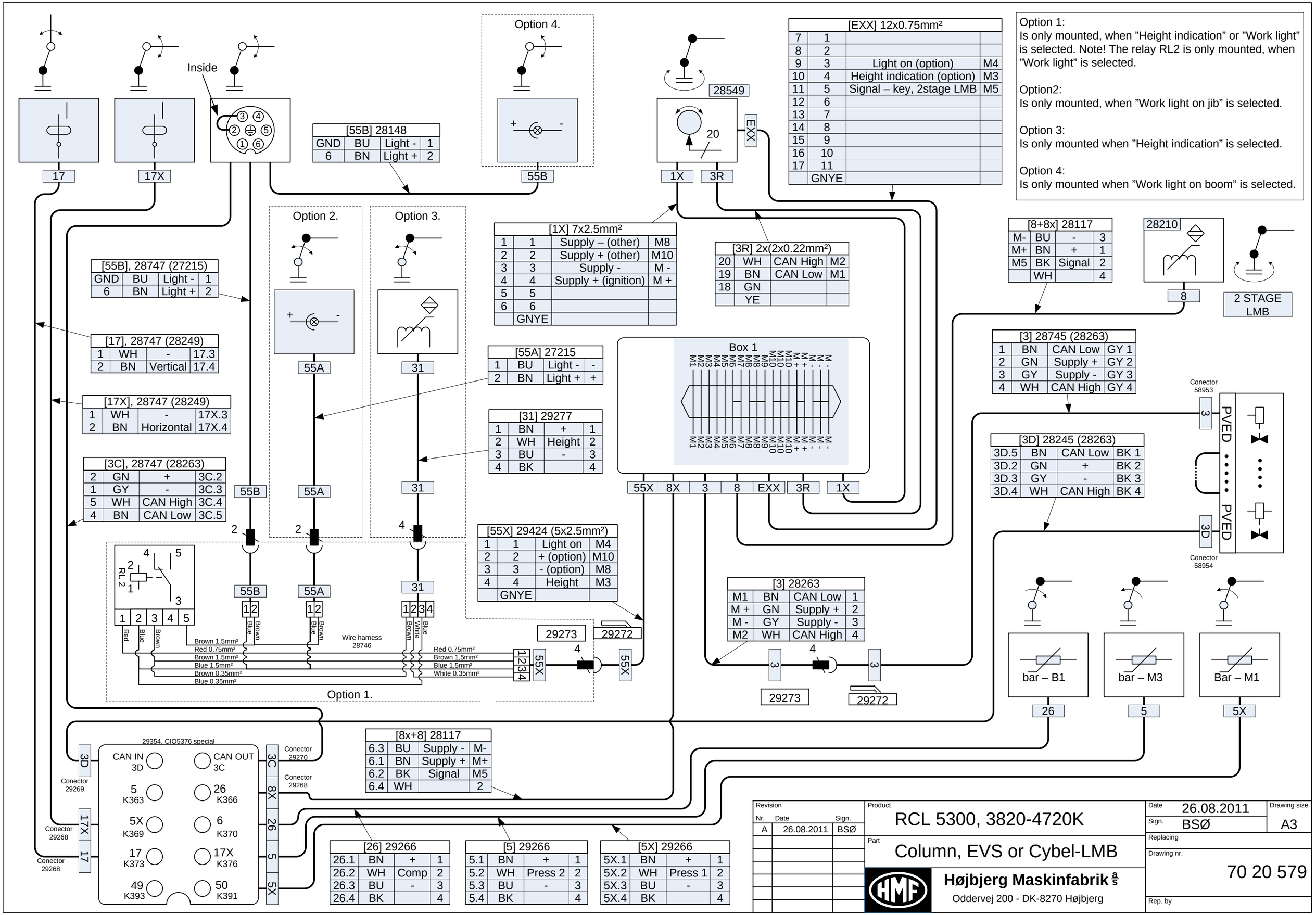

[EXX] 12x0.75mm²			
7	1		
8	2		
9	3	Light on (option)	M4
10	4	Height indication (option)	M3
11	5	Signal – key, 2stage LMB	M5
12	6		
13	7		
14	8		
15	9		
16	10		
17	11		
	GNYE		

[55B] 28148			
GND	BU	Light -	1
6	BN	Light +	2

[1X] 7x2.5mm²			
1	1	Supply – (other)	M8
2	2	Supply + (other)	M10
3	3	Supply -	M -
4	4	Supply + (ignition)	M +
5	5		
6	6		
	GNYE		

[3R] 2x(2x0.22mm²)			
20	WH	CAN High	M2
19	BN	CAN Low	M1
18	GN		
	YE		

[8+8x] 28117			
M-	BU	-	3
M+	BN	+	1
M5	BK	Signal	2
	WH		4

[55B], 28747 (27215)			
GND	BU	Light -	1
6	BN	Light +	2

[17], 28747 (28249)			
1	WH	-	17.3
2	BN	Vertical	17.4

[17X], 28747 (28249)			
1	WH	-	17X.3
2	BN	Horizontal	17X.4

[3C], 28747 (28263)			
2	GN	+	3C.2
1	GY	-	3C.3
5	WH	CAN High	3C.4
4	BN	CAN Low	3C.5

[55A] 27215			
1	BU	Light -	-
2	BN	Light +	+

[31] 29277			
1	BN	+	1
2	WH	Height	2
3	BU	-	3
4	BK		4

[55X] 29424 (5x2.5mm²)			
1	1	Light on	M4
2	2	+ (option)	M10
3	3	- (option)	M8
4	4	Height	M3
	GNYE		

[3] 28263			
M1	BN	CAN Low	1
M +	GN	Supply +	2
M -	GY	Supply -	3
M2	WH	CAN High	4

[3] 28745 (28263)			
1	BN	CAN Low	GY 1
2	GN	Supply +	GY 2
3	GY	Supply -	GY 3
4	WH	CAN High	GY 4

[3D] 28245 (28263)			
3D.5	BN	CAN Low	BK 1
3D.2	GN	+	BK 2
3D.3	GY	-	BK 3
3D.4	WH	CAN High	BK 4

[8x+8] 28117			
6.3	BU	Supply -	M-
6.1	BN	Supply +	M+
6.2	BK	Signal	M5
6.4	WH		2

[26] 29266			
26.1	BN	+	1
26.2	WH	Comp	2
26.3	BU	-	3
26.4	BK		4

[5] 29266			
5.1	BN	+	1
5.2	WH	Press 2	2
5.3	BU	-	3
5.4	BK		4

[5X] 29266			
5X.1	BN	+	1
5X.2	WH	Press 1	2
5X.3	BU	-	3
5X.4	BK		4